OTTEVANGER
PROCESS SOLUTIONS
SINCE 1909

Twin Conditioner

Technical Datasheet

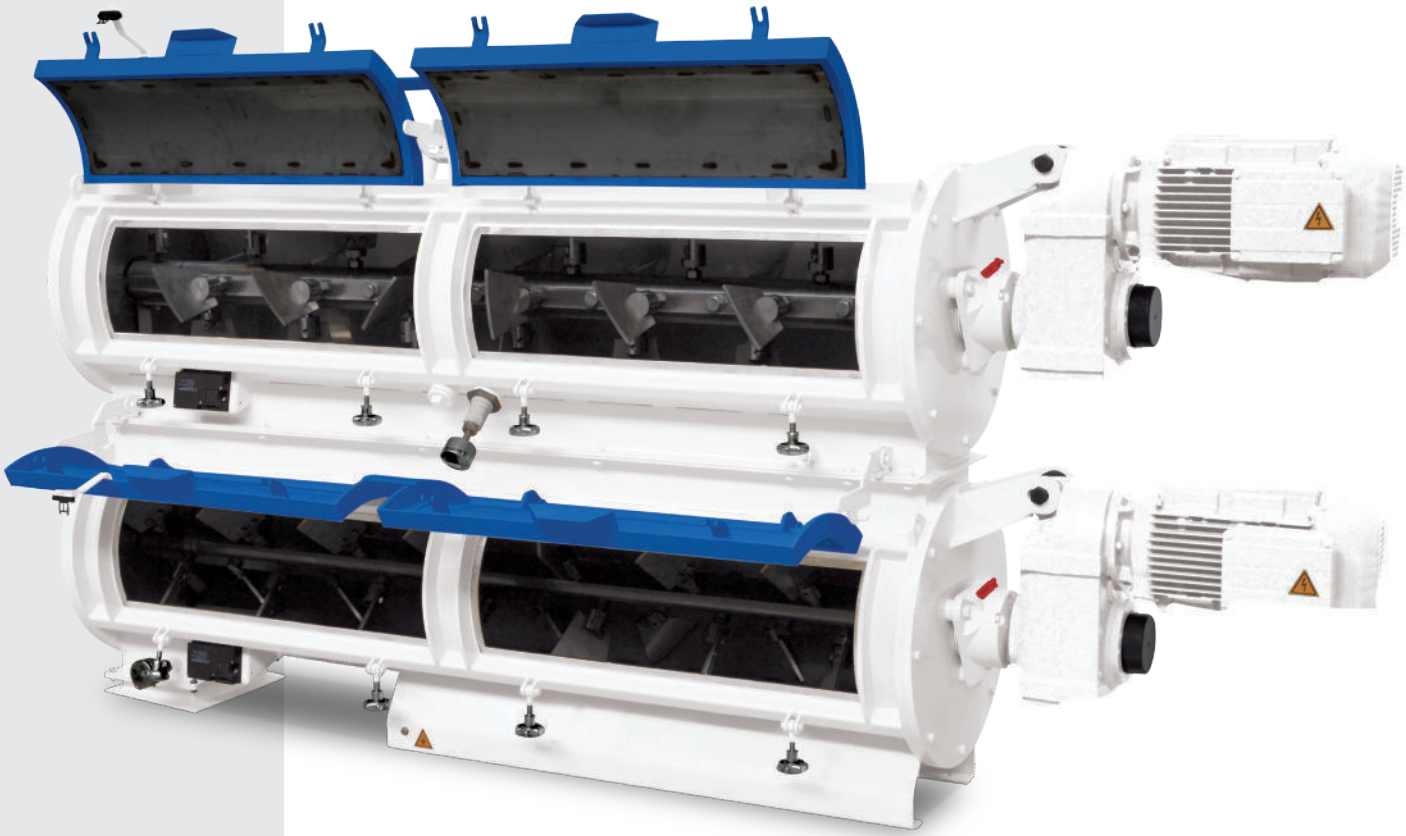

Developed with PTN expertise
in pelleting technology.

Easy
to clean

Optimum absorption
of steam and liquids

Longer maintenance
intervals

info@ottevanger.com | +31 (0)73 549 84 72 | www.ottevanger.com

Twin Conditioner

> The details in development and engineering make the difference in this Twin Conditioner.

Generously sized paddles, adjustable in both height and pitch, create a homogeneous mixture and an hygienic process

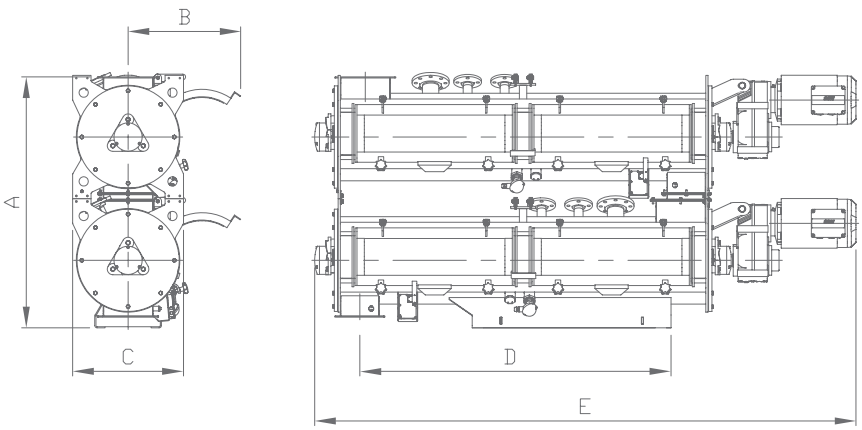

Type	Capacity (t/h)	Dimensions (in mm)					Motor-power (kW)
		A	B	C	D	E	
450 x 2000	15	1357	605	600	1683	2925	2x 9,2
500 x 2500	20	1365	645	660	2050	3575	2x 15
700 x 3000	30	1914	885	860	2830	4150	2x 18,5

Features

- 2 conditioners placed on top of each other
- Each mixer housing in AISI 304, base plate construction in heavy duty steel
- Solid mixer shafts in AISI 304 with interchangeable paddles, adjustable in both height and pitch
- Paddle holders in AISI 304, paddles in Hardox
- Built-in scrapers at endplates
- Stuffing box sealings on mixer shafts
- Closed shaft bearings on spacers outside the housings
- Each mixer shaft directly driven by gear motor. Suitable for frequency control. (Frequency converters not included)
- Large inspection doors with safety switch
- 2x temperature sensor PT 100
- Top mixer housing with 1 steam inlet 3" and 2 liquid inlets 1½"
- Electric heat tracing system, insulated with rock-wool (optional)

Advantages

- A doubling of the retention time of the product inside the conditioner in comparison with a single conditioner
- Homogeneous mixing and hygienic process
- Optimum absorption of steam and liquids
- Robust construction of the housing
- Easy to clean
- Longer maintenance intervals
- Simple design

For more information, visit our website.

info@ottevanger.com | +31 (0)73 549 84 72 | www.ottevanger.com

Developed with PTN expertise in pelleting technology.